NOVELTY EVALUATION OF AN IDEATION METHOD UTILIZING REPETITIVE TASKS VIA NOUN METAPHORS

RESEARCH ON IDEATION METHODS FOR DESIGN BEGINNERS (1)

Yoshinori MURAYAMA*[a], Hiroki SATO [b]

*[a]*Chiba Institute of Technology Graduate School, JAPAN*

[b]*Chiba Institute of Technology, JAPAN*

ABSTRACT

Design novices often experience difficulty expressing creativity because of limited access to information. To address this issue, we proposed the Leap Association Method (LAM), an ideation method for generating novel design proposals. LAM requires users to repeatedly generate metaphorical expressions from a given theme, creating difficult-to-interpret noun metaphors that increase the conceptual distance from the original theme. The final associated word is then used as a cue for generating a design proposal.This study examined the process and effectiveness of LAM through two experiments. The results provided partial support for its effectiveness. In the first experiment, 18 design students generated design proposals using LAM. After being presented with a theme, the participants created idea sketches, which were evaluated for novelty by eight design instructors. More than half of the design proposals received high novelty ratings. Interviews were then conducted, and the conceptual distance between the theme and the associated metaphorical expressions was scored. Design proposals with higher novelty ratings showed higher total conceptual-distance scores, and the conceptual-distance score increased with each association.In the second experiment, an improved LAM was compared with the checklist method. Twenty design students generated design proposals using both ideation methods. The results showed no significant difference in the clarity of the ideation method between LAM and the checklist method. However, more than half of the participants evaluated the design proposals generated by LAM as being more novel.These results indicate that LAM can support design novices in generating novel design proposals by progressively increasing conceptual distance through repeated noun-metaphor associations.

Keywords: *Design education, Ideation Methods, Creative Thinking, Metaphor*

**2-17-1 Tsudanuma, Narashino, Chiba 275-0016, Japan. s24P9508LZ@s.chibatech.ac.jp*

1 INTRODUCTION

The design process rarely proceeds in a fixed sequence. Instead, it often progresses randomly and iteratively. It has been reported that increasing the number of iterations improves the value of design proposals (Kumar, 2015). Such trial-and-error processes have been adopted in many ideation methods. At the same time, the interpretation of design has expanded through approaches such as design thinking, and the number of people studying design has increased. However, constraints on acquiring and using information, such as filter bubbles and echo chambers, are expected to affect creativity, making idea generation during divergent thinking more difficult. For example, free association may limit thinking, while forced association may limit novelty. To address this issue, we previously proposed the Leap Association Method (LAM), an ideation method that enables design novices to break away from fixed conceptual frameworks and generate novel ideas (Murayama & Sato, 2025). LAM is intended for use in design education. By repeatedly generating noun metaphors from a given theme, the method gradually increases the conceptual distance from the original theme. As a result, concepts unrelated to the theme are generated, supporting idea generation with unexpectedness and novelty. This study provides the basis for establishing LAM as an ideation method. It examines the ideation process and the effectiveness of LAM. Future research will further evaluate the method and establish an ideation method for design novices.

2 PURPOSE

The purpose of this study is to evaluate, through two experiments, whether LAM enables design novices to break away from existing conceptual frameworks and produce novel design proposals.

3 PREVIOUS APPROACHES TO IDEATION

According to Watanabe et al. (1992), the conceptual thinking process differs in the early stage of the design process. Because design novices work under limited information, they tend to generate ideas from familiar knowledge. Therefore, it is difficult for them to create unrelated concepts through free association, combine unrelated concepts, or generate ideas through conceptual combination. Tanaka and Noguchi (2004) proposed an ideation method using negative expressions during divergent thinking to break away from existing conceptual frameworks. In this method, multiple negative expressions describing low-level functions of an object are generated and combined through forced inference to produce novel ideas and unexpected images. However, because design novices have limited prior knowledge, they may find it difficult to accept negative interpretations of existing concepts, resulting in literal rather than creative interpretations. Another ideation method is the checklist method (Hoshino, 2005). This method is easy to use because ideas can be generated in a short time, and unrelated concepts can be created using checklist items. However, because participants can freely select the items, it is difficult for design novices to develop new ideas. Therefore, they need to construct new conceptual elements from the theme before generating design proposals.

4 A PROPOSAL FOR AN IDEATION METHOD USING NOUN METAPHORS

4.1 Using Metaphorical Expressions

Because design novices have limited access to information, their ideas during divergent thinking tend to remain at the level of literal interpretation. To address this problem, design proposals using metaphorical expressions have been studied. Metaphors have also been shown to be effective in programming education for beginners (Mayer, 1978), suggesting their usefulness in learning. However, design proposals based on metaphors are often easy to understand because they remain close to literal interpretation, resulting in limited novelty. Therefore, this study focuses on the use of metaphors beyond literal expressions. According to Gibbs (2008), a metaphor such as "A is B" indirectly implies that "A is similar to B in some respect." In other words, a metaphor is interpreted as an indirect comparison based on analogy and similarity. By intentionally generating such metaphorical expressions, new ideas can be produced. In this study, novelty is defined as the degree to which an idea is new, original, and unfamiliar.

4.2 Leap Association Method(LAM)

During divergent thinking, it is difficult for design novices to break away from existing conceptual frameworks. Therefore, increasing conceptual distance is important. Isono and Takahashi (2023) reported that the novelty of ideas generated through conceptual combination is influenced by the differences and relationships between concepts. However, design novices find it difficult to increase conceptual distance abruptly. LAM instructs users to make conceptual leaps from a given theme by repeatedly generating metaphors consisting of the theme and a noun metaphor, thereby producing difficult-to-interpret metaphorical expressions. As a result, new conceptual elements are constructed from the theme. The final associated word is then used as a cue to generate a new design proposal (Figure 1). By increasing the conceptual distance from the original theme through repeated metaphorical associations, LAM enables the generation of novel design proposals. Therefore, this study hypothesizes that design novices can construct new conceptual elements and generate novel design proposals by repeatedly associating and using noun metaphors.

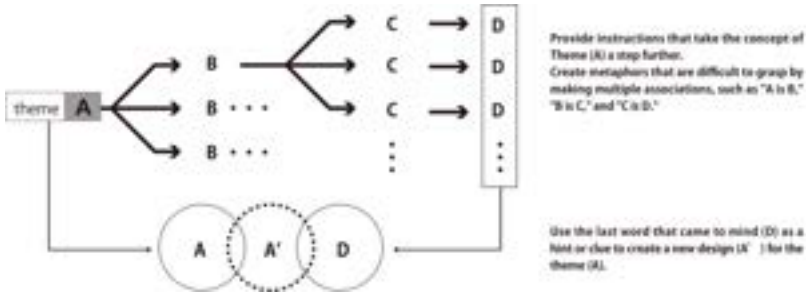

Figure 1. Schematic Diagram of LAM

5 RESEARCH METHODS

This study consists of two experiments. Experiment 1 examines the effectiveness of the LAM ideation process. Design students generated design proposals using LAM to determine

whether the method produces novel design proposals. The proposals were evaluated by design instructors, and conceptual distance was calculated from the association process. The relationship between novelty and conceptual distance was then examined. Experiment 2 compares LAM with the checklist method. In LAM, new conceptual elements are constructed from the theme before generating a design proposal. In contrast, in the checklist method, the timing of constructing new conceptual elements depends on the participant. Therefore, the relationship between the timing of concept construction and novelty was examined. In addition, differences in expert evaluations and participants' evaluations of the two ideation methods were investigated. Based on the results of these two experiments, the effectiveness of LAM as an ideation method for design novices was evaluated.

6 EXPERIMENT 1

6.1 Methods for Experiment 1

6.1.1 Word Generation and Design Proposals

Eighteen design students participated in the experiment. They were presented with Theme A (desk lamp) and instructed to think of a word describing another object that they believed had the same characteristics as the theme. They then wrote a syntagmatic metaphor in the form of "A is B" (Yamanashi, 2007). Based on the three-level structure of prototype theory (Rosch et al., 1976), the association task was repeated three times. Participants generated 21 words in total (Word B: 3, Word C: 9, and Word D: 9). Including the theme, the four-stage association process gradually increased the conceptual distance from the original theme. The associations were expressed as noun metaphors, in which both the theme and the metaphorical term were nouns and could be explicitly identified. After completing the word-generation task, participants exchanged worksheets. They then compared Theme A with Word D and selected one pair that they considered to be as conceptually distant from each other as possible (Figure 2). The selected Word D was used as a clue for generating a design proposal. Participants expressed their proposals as idea sketches, and drawing quality was not evaluated. To facilitate idea generation, Words B and C could also be used. Each worksheet included the proposal title, proposal characteristics, Theme A, and the selected word. Before the experiment, participants completed a practice session covering the entire procedure from word generation to design proposal.

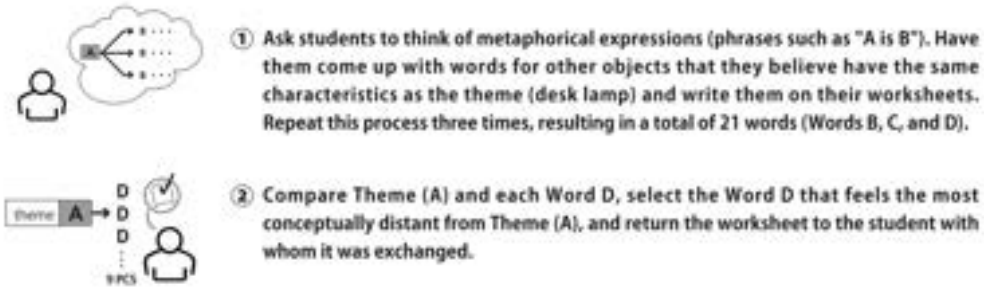

Figure 2. Steps for Writing a Sentence

6.1.2 Evaluation of Design Proposals

After completing the design proposal, participants self-evaluated the clarity of the ideation method using a five-point scale (1 = very unclear, 5 = very clear). They were then interviewed about the process of generating the associated words. Based on the interview results, the conceptual distance between associated words was classified into three levels (1 = direct, 3 = indirect). The classification was based on the Japanese Classification Vocabulary List (National Institute for Japanese Language and Linguistics, 2004) (Table 1). The scores were summed to obtain the total conceptual-distance score for each proposal. The idea sketches were evaluated by eight design instructors for novelty using a five-point scale (1 = not at all novel, 5 = very novel) based on the evaluation method proposed by Inoue (2005). During the evaluation, the instructors were provided with the idea sketch, proposal title, and proposal characteristics.

Table 1. Point Allocation Based on the Classification Vocabulary List

Evaluation Criteria	Differences in terminology, but between classification categories	Differences in classification categories, but between subcategories	Differences in departments
Scoring	1	2	3
Example	"Stove" "Induction Cooktop"	"Stove" "Griddle"	"Stove" "Sun"
	"Fishing Rod" "Whip"	"Fishing Rod" "Shower"	"Fishing Rod" "Giraffe"
	"Sun" "Moon"	"Sun" "Sunburn"	"Sun" "Fireworks"

6.2 Results of Experiment 1

6.2.1 Evaluation Results of Design Proposals

The experiment required 1.0–1.5 hours. A pilot study was conducted in advance to determine the number of associated words at each level. The mean self-evaluation score for the clarity of the ideation method was 2.9. Half of the participants selected "somewhat unclear" or "very unclear." For the expert evaluation, responses were obtained from eight design instructors. The mean novelty score of the design proposals was 3.4, with a maximum of 4.0 and a minimum of 2.6. Thirteen design proposals received a mean score above 3.0, indicating that more than half of the participants generated novel design proposals.

6.2.2 Results of Conceptual Distance Calculations Using a Classification Thesaurus

The mean conceptual-distance score increased slightly with each association (Table 2). For design proposals with a mean novelty score below 3.0, the mean conceptual-distance scores of the second and third associations were nearly the same. In contrast, for proposals with a mean novelty score above 3.0, the conceptual-distance score increased from the second to the third association. Thus, design proposals with higher novelty ratings showed greater conceptual distance at each stage of the association process. The total conceptual-distance scores for each design proposal showed the same tendency (Table 3). The correlation between the total conceptual-distance score and the mean expert novelty score showed a weak correlation ($R^2 = 0.40$) (Figure 3).

Table 2. An example of a table

participant	A	B	Background and Scores for AB		C	Background and Scores for BC		D	Background and Scores for CD	
⋮	⋮	⋮	⋮	⋮	⋮	⋮	⋮	⋮	⋮	⋮
8	Desk lamp	Plates	The plate I have at home is the same color as my desk lamp	2	Desks	Imagine what's there	2	People	Imagine the legs of a desk	3
					Inner tubes	The same shape	1	Water sliders	Imagine a pool	2
					Rice	Inspired by a rice bowl	2	Perfume	Imagine the rice being cooked	2
		Sun	A bright image	3	Moon	Types of Planets	1	Idol	A sparkling image	3
					Fireworks	A glowing image	3	Fireflies	A glowing image	3
					Kotatsu	A warm and cozy feel	3	Socks	Imagine putting your foot in	2
		Textbook	The image of studying	3	Chocolate	Imagine a square shape	3	Winter	Buy and eat during the winter season	3
					Air	A breeze blows when you turn the page	3	Cigarettes	Imagine a gas	3
					Bacon	A thick image	3	Skin	The image of something burning	2
⋮	⋮	⋮	⋮	⋮	⋮	⋮	⋮	⋮	⋮	⋮
Average score		2.0			2.2			2.3		

Table 3. The Relationship Between Conceptual Distance Scores and Expert Evaluations

Participant		Average Expert Rating	Total score for 1st round (between AB) (out of 9 points)	Total score for 2nd round (between BC) (out of 27 points)	Total score for 3rd round (between CD) (out of 27 points)	Total score (out of 63 points)
1		3.1	5	13	20	38
2		3.8	4	17	24	45
3		3.9	4	15	24	43
4		2.8	4	20	19	43
5		3.9	6	22	21	49
6		3.9	6	20	21	47
7		3.6	7	19	26	52
8		3.6	8	21	24	53
9		3.8	4	20	24	48
10		4.0	7	27	21	55
11		3.4	5	23	23	51
12		4.0	8	23	20	51
13		2.8	8	19	16	43
14		2.6	4	14	17	35
15		3.3	9	17	17	43
16		3.5	8	26	19	53
17		2.6	6	22	17	45
18		2.8	6	20	18	44
Avg.	All Designs	3.4	6.1	19.9	20.6	46.6
	Design proposals exceeding 3 points	3.7	6.3	20.8	22.2	49.2
	Design proposals falling below 3 points	2.7	5.5	18.0	17.8	41.3

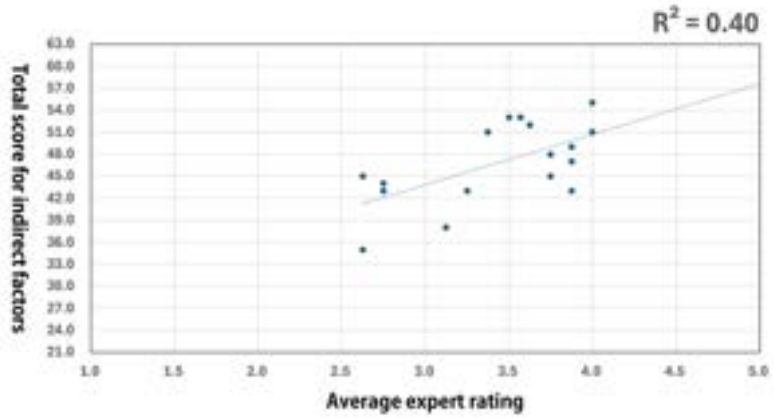

Figure 3. Correlation Chart Between Conceptual Distance and Novelty

6.3 Discussion of Experiment 1

Participants increased the conceptual distance from the original theme through repeated associations. As the associated words became more distant from the theme, novelty was generated through unexpected associations, which may explain the weak correlation between conceptual distance and the expert novelty evaluation. The limited selection of associated words may also have restricted the novelty of the design proposals. Eight participants did not use Word D directly. Four generated proposals using words similar to or derived from Word D (Figure 4, left), whereas the remaining four used Word B or Word C (Figure 4, right). These proposals did not fully utilize the conceptually distant word. However, when Word D was difficult to use, intermediate words functioned as alternative cues, suggesting a secondary effect of LAM. This experiment provides insight into the association process and forced association. However, because only LAM was evaluated, its effectiveness could not be fully verified. Therefore, Experiment 2 compares LAM with the checklist method.

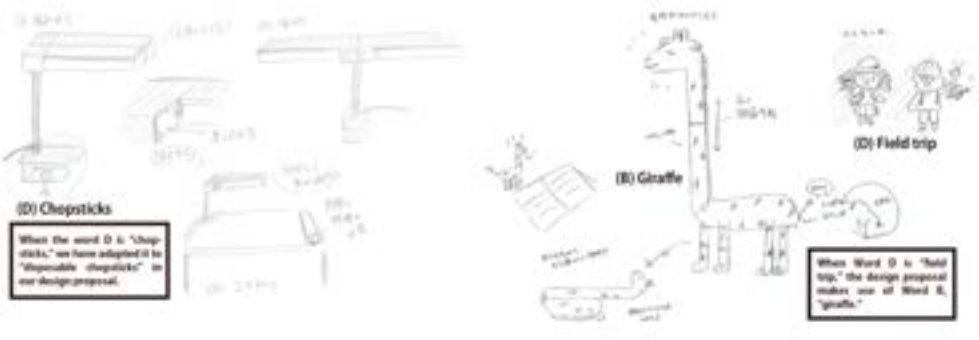

Figure 4. Examples of Design Proposals

7 EXPERIMENT 2

7.1 Methods for Experiment 2

Twenty design students generated design proposals using both LAM and the checklist method. The theme for LAM was a water bottle, whereas the theme for the checklist method was earphones. The checklist method was based on Osborn's checklist. Because the original checklist uses formal expressions, the items were rewritten in colloquial language with reference to a design textbook (Kawamen & Suga, 2003) (Table 4). Participants could use multiple checklist items. To shorten the experiment, the number of associated words was reduced while maintaining three association stages (Word B: 3, Word C: 6, Word D: 6). Participants were divided into two groups. One group used LAM followed by the checklist method, whereas the other group used the reverse order. The two sessions were conducted at least two days apart. After completing the design proposals, participants evaluated the clarity of each ideation method using a five-point scale and provided written comments. They then compared their two design proposals and selected which method was easier for generating design proposals and which proposal was more novel. The design proposals were evaluated by eight design instructors. The proposals were randomly assigned to the

evaluators using the RAND and MOD functions. Statistical analyses were conducted to examine differences between the ideation methods and among the evaluators.

Table 4. The Relationship Between Conceptual Distance Scores and Expert Evaluations

No.	1	2	3	4	5	6	7	8	9
Literary	(Put to) Other uses	Adapt	Modify	Magnify	Minify	Substitute	Rearrang	Reverse	Combine
Colloquial	Are there any other uses for this?	Can this be applied to other areas?	Can this be modified?	What if we make it bigger?	What if we make it smaller?	What if I use a substitute?	What if I swap them out?	What if I reverse it?	What if I combine them?

7.2 Results of Experiment 2

7.2.1 Participants' Self-Evaluation

The mean score for the clarity of the ideation method was 4.0 for LAM and 3.8 for the checklist method. A statistical test showed no significant difference between the two methods ($\alpha = 0.05$, two-tailed, $p = 0.65$). Therefore, the clarity of the two ideation methods was considered comparable. When participants compared the two methods, eight selected LAM as being easier for generating design proposals, whereas ten selected the checklist method. However, when asked which design proposal was more novel, 13 of the 20 participants selected the proposal generated using LAM (Table 5).

7.2.2 Expert Evaluation

The mean expert novelty score was 3.2 for LAM and 2.9 for the checklist method. Although the mean scores differed between the first and second evaluator groups, both groups assigned higher novelty scores to LAM than to the checklist method. A statistical test showed no significant difference between the two ideation methods ($\alpha = 0.05$, two-tailed, $p = 0.32$). Among the eight design instructors, five gave higher novelty ratings to LAM. Of these, two showed a statistically significant preference for LAM (Table 6).

Table 5. Participant Self-Assessment Results

Participant		1	2	3	4	5	6	7	8	9	10	11	12	13	14	15	16	17	18	19	20	Avg.
Degree of Clarity in Ideation Methods	LAM	5	4	5	2	5	3	3	2	2	4	5	4	5	4	3	5	4	5	5	4	4.0
	Chekclist Method	4	5	4	4	4	4	2	4	4	5	4	2	3	2	4	4	5	4	4	3	3.8
Which method made it easier to propose designs?		LAM	Neither	CHK	Neither	LAM	CHK	LAM	CHK	CHK	CHK	LAM	CHK	CHK	LAM	CHK	LAM	CHK	LAM	CHK	LAM	Significant difference α = 0%, p = 0.65, two-tailed No
Which proposal was considered a new idea?		CHK	CHK	LAM	LAM	LAM	LAM	LAM	LAM	LAM	LAM	Neither	LAM	LAM	LAM	LAM	Neither	CHK	Neither	CHK	LAM	

Table 6. Expert Assessment Results

	1st half				1st half Avg.	2nd half				2nd half Avg.	Avg.	Significant difference
Design instructors	1	2	3	4		5	6	7	8			
LAM	4.6	3.5	3.0	3.0	3.6	3.5	2.9	2.3	2.4	2.8	3.2	No
Chekclist method	3.9	3.2	3.6	2.7	3.4	3.2	2.8	1.5	2.6	2.5	2.9	
Significant difference t-test: One-tailed test (5% significance level)	Yes	No	No	No	—	No	No	Yes	No	—	—	—

7.3 Discussion of Experiment 2

The mean expert novelty score was higher for LAM than for the checklist method, although statistically significant differences were found only in a limited number of cases. This may be

because the evaluation criteria were not explicitly presented to the evaluators. Using paired comparisons instead of rating scales may improve the evaluation process. Participants, however, regarded the LAM proposals as more novel. Comments on the checklist method indicated that its proposals tended to be more practical and that selecting checklist items required more time. Most participants expressing these opinions preferred the LAM proposals (Table 7). Although participants considered the checklist method easy to use, they evaluated its novelty less favorably. These evaluations may have been influenced by personal preferences. However, because LAM requires participants to construct new conceptual elements from the theme, the results suggest its potential effectiveness.

Table 7. Comparison of self-assessments on clarity, comments, and originality (partial)

Participant	Checklist method		LAM		Which is the newer proposal: LAM or the Checklist method?
	Level of clarity	Comments	Level of clarity	Comments	
1	4	I couldn't come up with any ideas. I found it difficult to think outside the box.	5	By proposing ideas from things that seemed completely unrelated, I was able to broaden my way of thinking.	Checklist method
4	4	It was easy to get started, and ideas came to me easily, but the result ended up being rather cliché.	2	It took me a while to come up with any ideas.	LAM
5	4	It felt like it took a long time for ideas to come to me.	5	I felt that designing by relating it to something else, as I did this time, made it easier to come up with ideas.	LAM
6	4	It felt like the process went smoothly. However, it was hard to come up with truly original ideas.	3	It was somewhat forced, but it went smoothly; however, I think the chosen words might make it difficult to express the concept.	LAM
8	4	I was pressed for time, so it was difficult to think deeply about things.	3	It was interesting how, when associating words, I tried to break down the elements of each word to find its essence.	LAM
10	5	No matter what I did, I kept coming up with only practical ideas.	5	I was worried I wouldn't be able to come up with any ideas because I strayed from the theme, but the process itself was interesting.	LAM
18	5	I wasn't sure which one to choose, so it felt like it took a little longer than expected.	5	It was difficult, but I was able to think of ideas from perspectives I wouldn't normally notice.	Neither
20	3	I found it difficult to come up with ideas.	3	I feel like the initial metaphor really stuck with me.	LAM

8 CONCLUSION

This study evaluated the effectiveness of LAM for generating novel design proposals by design novices through two experiments. In Experiment 1, design proposals that received higher expert novelty scores also showed higher conceptual-distance scores. In addition, the conceptual-distance score increased with each association, indicating that participants gradually increased the conceptual distance from the original theme while generating design proposals. In Experiment 2, LAM was compared with the checklist method. Although a statistically significant difference in expert novelty evaluation was confirmed only in a limited number of cases, the clarity of the ideation method was comparable between the two methods. Moreover, more than half of the participants evaluated the design proposals generated using LAM as more novel. These results provide partial support for the effectiveness of LAM. LAM uses the theme and the final associated word to generate design proposals. However, some participants used intermediate associated words or did not use the final associated word directly, making design proposal generation difficult in some cases. To improve the method, multiple conceptually distant words should be prepared so that participants can select alternative cues when necessary. LAM is intended to support divergent thinking. Therefore, the resulting design proposals may have limited usefulness and feasibility, indicating that further improvement of the method is required. Although this study focused on novelty, particularly unexpectedness and originality, future studies should also examine other design qualities. Because LAM depends heavily on language, future research should also consider linguistic and cultural contexts when developing the method.

9 FUTURE WORK

Future research aims to generalize LAM by establishing it as an ideation method for practical design exercises and educational settings. The method will be improved by comparing the use and non-use of conceptually distant words and by examining how associated words should be used during the ideation process.

REFERENCES

Kumar, V. (2015). 101 Design Methods (Watabe, N., Trans.). Eiji Press, pp.14-16.

Murayama, Y. & Sato, H. (2025). A Proposal for a Method of Generating Ideas for Design Novices. Japanese Society for the Science of Design the 72nd Spring Research and Presentation Conference, A6-07. https://doi.org/10.11247/jssd.72.0_78

Watanabe, M., Mori, N., & Sugiyama, K. (1984). Developing a System to Get Suitable Formative Elements by Using of Fuzzy Inference. Bulletin of Japanese Society for the Science of Design, 88, pp.145–152. https://doi.org/10.11247/jssdj.1992.145_1

Hoshino, M. (2005). Hassouhounyuumon(Introduction to Creative Thinking). Nikkei Business Publications, Inc. , pp.128-134.

Tanaka, T. & Noguchi, N. (2004). Denial Expression Method for Creative Concept Generation. Bulletin of Japanese Society for the Science of Design, 51(3), pp.39-46. https://doi.org/10.11247/jssdj.51.39_3

Mayer, R. (1978). Advance Organizers That Compensate for the Organization of Text. Journal of Educational Psychology, 70(6), pp.880–886. https://doi.org/10.1037/0022-0663.70.6.880

Gibbs, R. W., Jr. (2008). The Poetics of Mind (K. Yagi, Trans.). Kenkyusha Co., Ltd., pp.227-234.

Isono, M., & Takahashi, K. (2023). The Use of Conceptual Combination and Analogy and Their Relationship in Creative Idea Development. Bulletin of Japanese Society for the Science of Design, 69(4), pp.29–38. https://doi.org/10.11247/jssdj.69.4_29

Yamanashi, M. (2007). Hiyu to Rikai(Metaphors and Understanding). University of Tokyo Press., pp.15-20.

Rosch, E., Mervis, C., & Wayne, G. D. (1976). Basic Objects in Natural Categories. Cognitive Psychology, 8(3), pp.382–439. https://doi.org/10.1016/0010-0285(76)90013-X

Inoue, K. (Ed.). (2005). Design and Kansei. KAIBUNDO PUBLISHING CO., LTD., pp.179-181

National institute for japanese language and linguistics (Ed.). (2004). Classification Thesaurus. Dainippon Tosho Co.,Ltd.

Kawamen, E., & Suga, M. (2003). Souzoutekikougakusekkei No Houhou(Methods of Creative Engineering Design). Yokendo Ltd. Publishers, pp.168-169.